Product Information Packet

Model AHP-1800X

Solid State, NEMA 4X, Air Conditioner

with TC-1F Temperature Control

Part #0-01F0-2-000



Thank you for your purchase. Information has been enclosed regarding the installation, specifications, and wiring of your solid-state assembly.
Please read and follow all instructions carefully before installation. Only qualified technicians should install this equipment.

If you have any questions regarding your equipment, please do not hesitate to call us at 773-342-4900, and we will be happy to assist you. We are open from 8:00 am-4:30 pm Central Time.

Included in this packet you will find:

Installation Notes for Air Conditioners

Product Literature and Specifications

Assembly Drawing # 1800-B-A18

Wiring Drawing # 1800-A-E116

Installation Drawing # 1800-A-F49

Temperature Control Information

Warranty Information

teca

ThermoElectric Cooling America Corporation
4048 W. Schubert Avenue • Chicago, IL (U.S.A.) 60639
Ph: 773/342-4900 Fx: 773/342-0191
sales@thermoelectric.com www.thermoelectric.com

Important Installation Notes for Air Conditioners

Mounting Styles: Both 'thru mount' and 'flush mount' units can be positioned in any orientation and on any enclosure surface. It is important to consider interior air flow patterns when determining the mounting location. Also of importance is an unrestricted flow of ambient air thru the hot side heat exchanger. Ease of access and inspection must be considered for those applications in particularly severe environments which may require occasional maintenance.

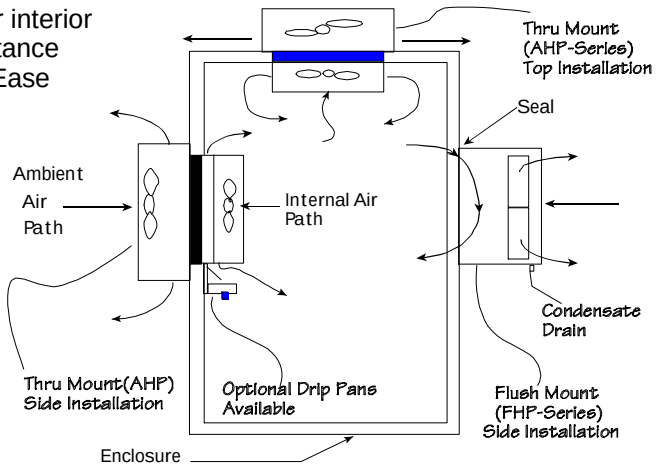

Vertical (Side/Front/Back) Mounting:

Vertical mounting refers to the vertical direction of the cold side or interior fins and is recommended for applications with high humidity, poor and incomplete cabinet seals or any condition which may cause the cold side fins to be maintained at temperatures below the dew point for long periods of time allowing for the formation of condensation. The vertical fin direction provides a drip path whereupon condensation can be collected via a moisture removal system (standard on FHP-units) or a drip pan positioned below the cold side fins. Drip pans are optional for thru mount units.

Condensate Removal System:

All FHP-Series and AHP-1400 air conditioners contain a built-in condensate removal system. The condensate kit consists of a antifungal sponge with a condensate wick. PVC tubing is also provided for drainage. Drip pans are optional for thru mount units which must be evaluated on an individual basis. Equations defining a relationship between the cold side fin and enclosure temperatures are provided to assist in the evaluation.

Top Mounting:

Though often the easiest location to mount it is often the most difficult to protect from condensation in this orientation due to the fin orientation, gravity and any susceptible components below. If a drip pan is employed by the end user use caution to place the pan far enough away from the internal fan to minimize the restriction of air flow. The pan should cover the fin ends as well as the fan area. When there is a choice, the vertical orientation is preferred by most users.

Maintenance:

Since the technology is solid-state, there are no filters, compressors, or fluorocarbons to maintain. The only moving parts are the fans. It is recommended for harsh or dirty environments that the heat sinks be cleaned from time to time. This can be accomplished by directing compressed air over the external fins or on NEMA 4 versions by hosing the unit down. This will increase the overall life and performance of the system.

Cautions:

Take care when mounting not to damage the seal between the hot and cold side sinks. Do not attempt to mount a unit to a warped surface or try to make the units mounting surface conform to an unflat surface. Do not pinch or damage any leads when mounting. Do not over tighten any installation screw, use reasonable force. Always mount with any condensate drain down. Do not compress the cold side between the hot side and any other surface. Do not obstruct the airflow on either side. When mounting consider the natural air flows of the enclosure. Connect power only after the installation is complete.

Notes on condensation:

Condensation occurs at the cold side fins when the surface temperature goes below the dew point. To reduce or remove condensate, consider the following:

- Regulate the Fin Temperature above the Dewpoint.
- Keep Enclosure Closed and Sealed from Outside Humidity.
- Use Desiccant (Moisture absorbing Granules.)
- Employ Condensate Removal System/Drip Pans.

If you have any questions regarding your installation, Please feel free to contact our technical department for assistance at 773-342-4900.

AHP-1800 Air Conditioner

Air Cooled
Thru Mount
NEMA-12, 4, 4X

120 VAC, 240 VAC Input



FEATURES

- Compact, (18" L X 12.35" W X 9.69"D)
- Excels in high ambient temperatures
- Environmentally Safe
- Dual voltage versions available, consult factory.
- No compressor, fluorocarbons or filters
- Virtually maintenance-free operation
- Stainless steel exterior housing
- Versions to withstand corrosive environments, shock and vibration
- Mounts and operates in any orientation

INCLUDES

- Adjustable temperature control
- Mounting gasket and hardware
- Power input line cord

OPTIONS

- Other temperature settings for single set point controls
- Custom finishes

SPECIFICATIONS

	MODEL	PART NUMBER	PERFORMANCE RATING BTU/HR	VOLTAGE VAC 50/60 HZ	CURRENT AMPS.	WEIGHT LBS.(KG)	TEMP. CONTROL	OPERATING AMBIENT TEMPERATURE RANGE °C	OPERATING ENCLOSURE TEMPERATURE RANGE °C	AGENCY APPROVALS
NEMA 12	AHP-1800	0-0180-0-000	1035-1180	120	8.0	46(21)	TC-6F	-40/+65	-10/+60	UL1995/CSA22.2
	AHP-1800	0-0150-0-000	1035-1180	120	8.0	46(21)	EXT*	-40/+65	-10/+60	UL1995/CSA22.2
	AHP-1800	0-01F0-0-000	1035-1180	120	8.0	46(21)	85°F (30°C)	-40/+65	-10/+60	UL1995/CSA22.2
	AHP-1800HC	0-0130-1-000	1035-1180	120	8.0	46(21)	TC-3F	-40/+65	-10/+60	UL1995/CSA22.2
	AHP-1800HC	0-0150-1-000	1035-1180	120	8.0	46(21)	EXT*	-40/+65	-10/+60	UL1995/CSA22.2
	AHP-1802	0-0182-0-000	1035-1180	240	5.0	46(21)	TC-6F†	-40/+65	-10/+60	UL1995/CSA22.2
	AHP-1802	0-0152-0-000	1035-1180	240	5.0	46(21)	EXT*	-40/+65	-10/+60	UL1995/CSA22.2
	AHP-1802	0-01F2-0-000	1035-1180	240	5.0	46(21)	85°F (30°C)	-40/+65	-10/+60	UL1995/CSA22.2
	AHP-1802HC	0-0132-1-000	1035-1180	240	5.0	46(21)	TC-3F	-40/+65	-10/+60	UL1995/CSA22.2
	AHP-1802HC	0-0152-1-000	1035-1180	240	5.0	46(21)	EXT*	-40/+65	-10/+60	UL1995/CSA22.2
	AHP-1801	0-0181-0-000	1035-1180	120/240	8.0/5.0	46(21)	TC-6F†	-40/+65	-10/+60	UL1995/CSA22.2
	AHP-1801	0-01F1-0-000	1035-1180	120/240	8.0/5.0	46(21)	85°F (30°C)	-40/+65	-10/+60	UL1995/CSA22.2
	AHP-1801HC	0-0131-1-000	1035-1180	120/240	8.0/5.0	46(21)	TC-3F	-40/+65	-10/+60	UL1995/CSA22.2
NEMA 4	AHP-1800XE	0-0180-4-000	1035-1180	120	8.0	47(21.4)	TC-6F	-40/+65	-10/+60	UL1995/CSA22.2
	AHP-1800XE	0-0150-4-000	1035-1180	120	8.0	47(21.4)	EXT*	-40/+65	-10/+60	UL1995/CSA22.2
	AHP-1800XE	0-01F0-4-000	1035-1180	120	8.0	47(21.4)	85°F (30°C)	-40/+65	-10/+60	UL1995/CSA22.2
	AHP-1800XEHC	0-0130-5-000	1035-1180	120	8.0	47(21.4)	TC-3F	-40/+65	-10/+60	UL1995/CSA22.2
	AHP-1800XEHC	0-0150-5-000	1035-1180	120	8.0	47(21.4)	EXT*	-40/+65	-10/+60	UL1995/CSA22.2
	AHP-1802XE	0-0182-4-000	1035-1180	240	5.0	52(23.6)	TC-6F†	-40/+65	-10/+60	UL1995/CSA22.2
	AHP-1802XE	0-0152-4-000	1035-1180	240	5.0	52(23.6)	EXT*	-40/+65	-10/+60	UL1995/CSA22.2
	AHP-1802XE	0-01F2-4-000	1035-1180	240	5.0	52(23.6)	85°F (30°C)	-40/+65	-10/+60	UL1995/CSA22.2
	AHP-1802XEHC	0-0132-5-000	1035-1180	240	5.0	52(23.6)	TC-3F	-40/+65	-10/+60	UL1995/CSA22.2
	AHP-1802XEHC	0-0152-5-000	1035-1180	240	5.0	52(23.6)	EXT*	-40/+65	-10/+60	UL1995/CSA22.2
NEMA 4X	AHP-1800X	0-0180-2-000	1035-1180	120	8.0	47(21.4)	TC-6F	-40/+65	-10/+60	UL1995/CSA22.2
	AHP-1800X	0-0150-2-000	1035-1180	120	8.0	47(21.4)	EXT*	-40/+65	-10/+60	UL1995/CSA22.2
	AHP-1800X	0-01F0-2-000	1035-1180	120	8.0	47(21.4)	85°F (30°C)	-40/+65	-10/+60	UL1995/CSA22.2
	AHP-1800XHC	0-0130-3-000	1035-1180	120	8.0	47(21.4)	TC-3F	-40/+65	-10/+60	UL1995/CSA22.2
	AHP-1800XHC	0-0150-3-000	1035-1180	120	8.0	47(21.4)	EXT*	-40/+65	-10/+60	UL1995/CSA22.2
	AHP-1801X	0-0181-2-000	1035-1180	120/240	8.0/6.0	47(21.4)	TC-6F†	-40/+65	-10/+60	UL1995/CSA22.2
	AHP-1801X	0-01F1-2-000	1035-1180	120/240	8.0/6.0	47(21.4)	85°F (30°C)	-40/+65	-10/+60	UL1995/CSA22.2
	AHP-1801XHC	0-0131-3-000	1035-1180	120/240	8.0/6.0	47(21.4)	TC-3F	-40/+65	-10/+60	UL1995/CSA22.2

* Unit is set for 5-32 VDC external signal, relay(s) included
† Unit evaluated by ETL

Consult factory for shock and vibration models

AHP-1800

PERFORMANCE CURVE

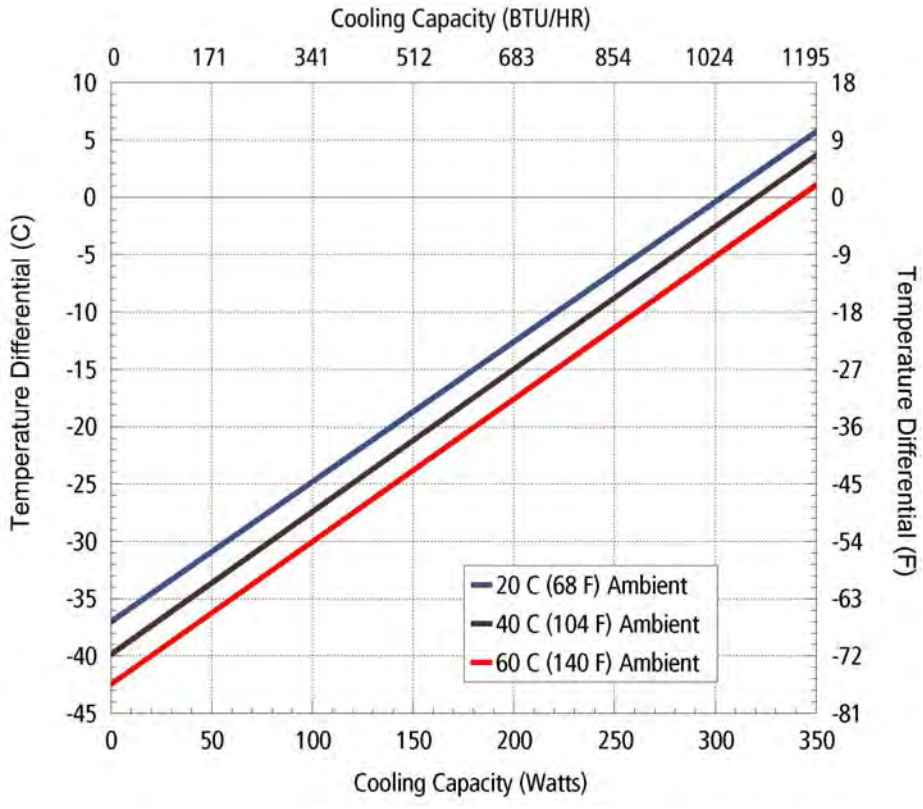

Equation of line: y=ΔT(°C) x=Capacity (Watts)			
Ambient Temp	**20°C**	**40°C**	**60°C**
Enclosure Air	y=.122x-37.0	y=.122x-39.7	y=.122x-42.3
Cold Sink	y=.09x-37.0	y=.09x-39.7	y=.09x-42.3

MOUNTING STYLE

Thru Mount

ENVIRONMENTS SERVED

NEMA-12 IP 52

NEMA-4,4X IP 56

RATING (TRADITIONAL)

1100 BTU/hr @ 0 °F ΔT

1420 BTU/hr @ +20 °F ΔT *

RATING (DIN 3168)

322 Watts L35 L35

210 Watts L35 L50

* See page 10

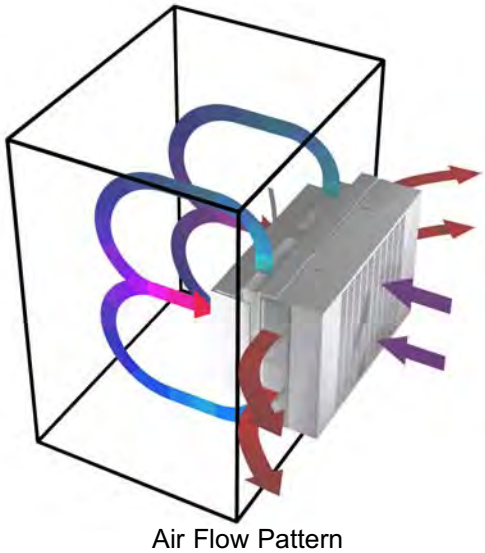

Air Flow Pattern

DIMENSIONS

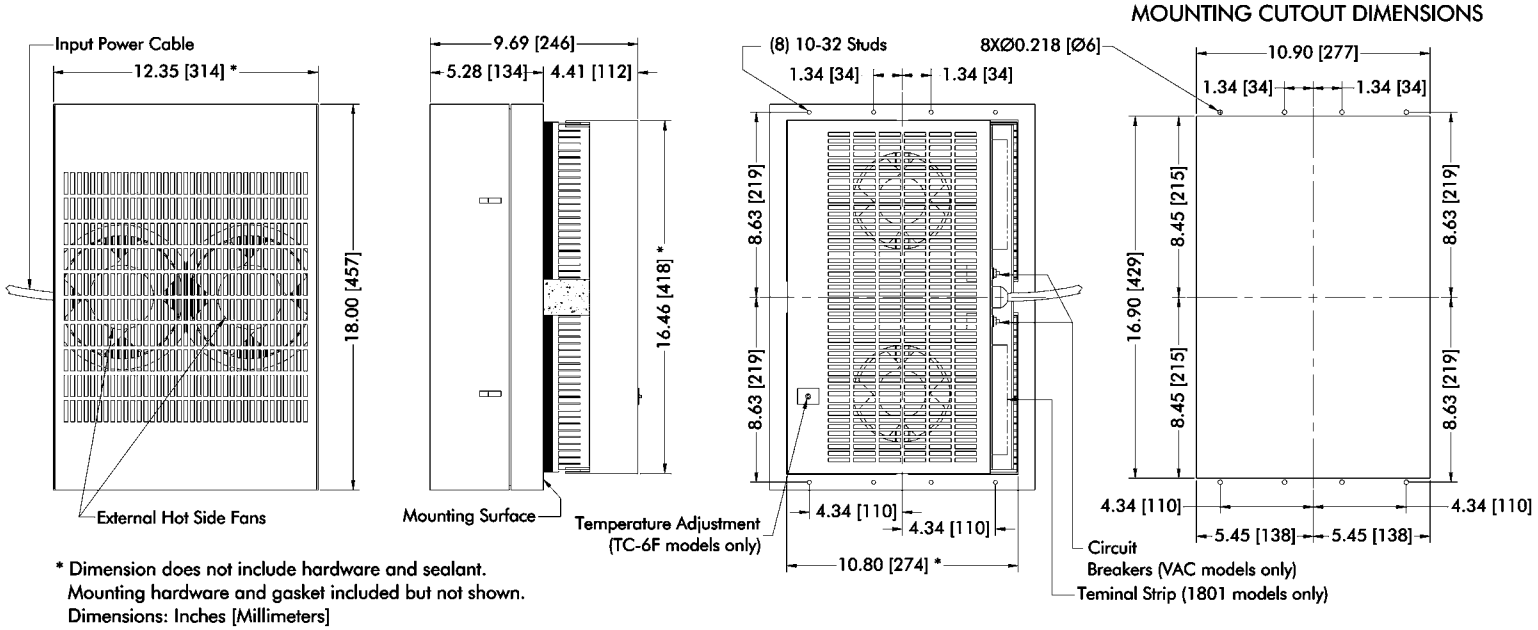

* Dimension does not include hardware and sealant.
Mounting hardware and gasket included but not shown.
Dimensions: Inches [Millimeters]

LTR	DESCRIPTION	DATE	APPROVED
A	ADD METRIC DIMENSIONS	03.23.90	I.N
B	REVISED TITLE	5.13.90	IN
C	CORRECTED $\frac{1.34}{(44)}$ TO $\frac{1.34}{(34)}$	09.10.92	IN

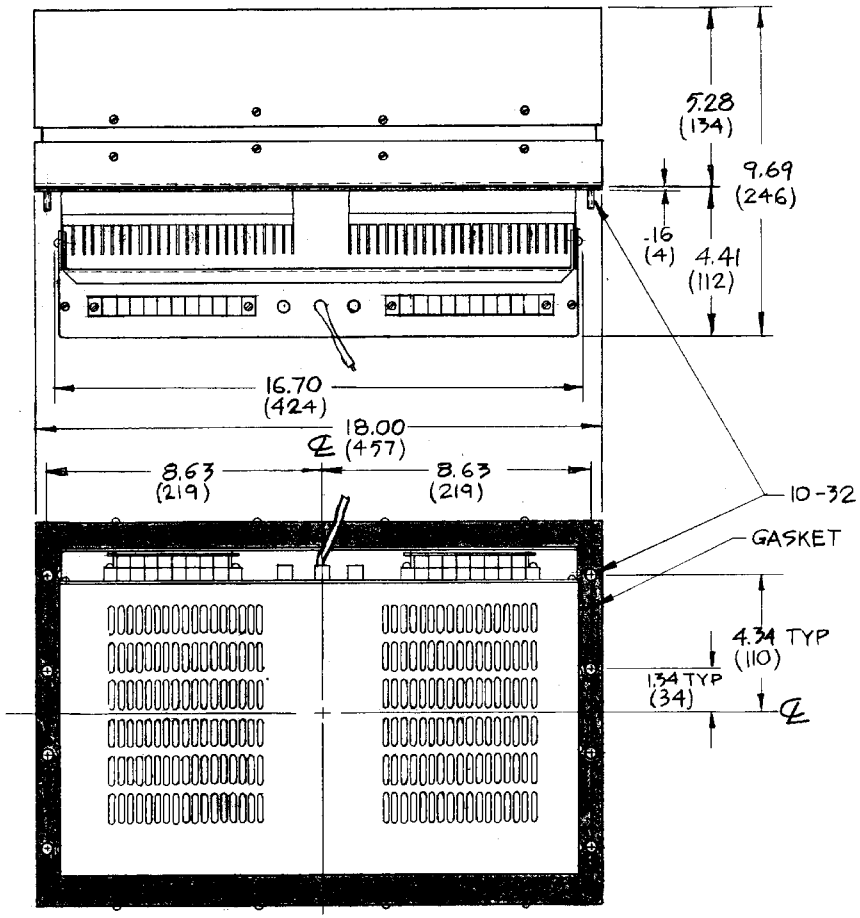

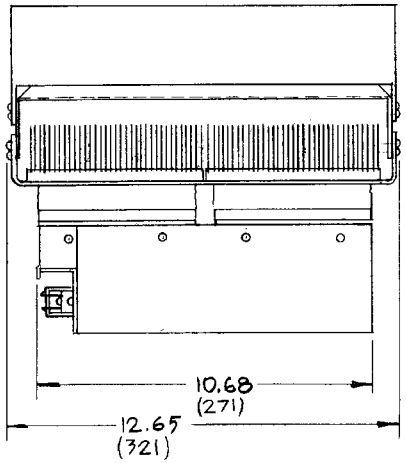

NOTE : DIMENSIONS ; INCHES
(MILLIMETERS)

UNLESS OTHERWISE SPECIFIED DIMENSIONS ARE IN INCHES TOLERANCES ARE: FRACTIONS DECIMALS ANGLES ± .XX ± ± .XXX ±	teca ThermoElectric Cooling America Corp.
MATERIAL	AHP 1801/1801X ASSEMBLY
FINISH	
APPROVALS / DRAWN I.N. / DATE 1.23.90	SIZE B / DRAWING NO. 1800-B-A18
CHECKED	SCALE 1/4 / D1291 / SHEET OF

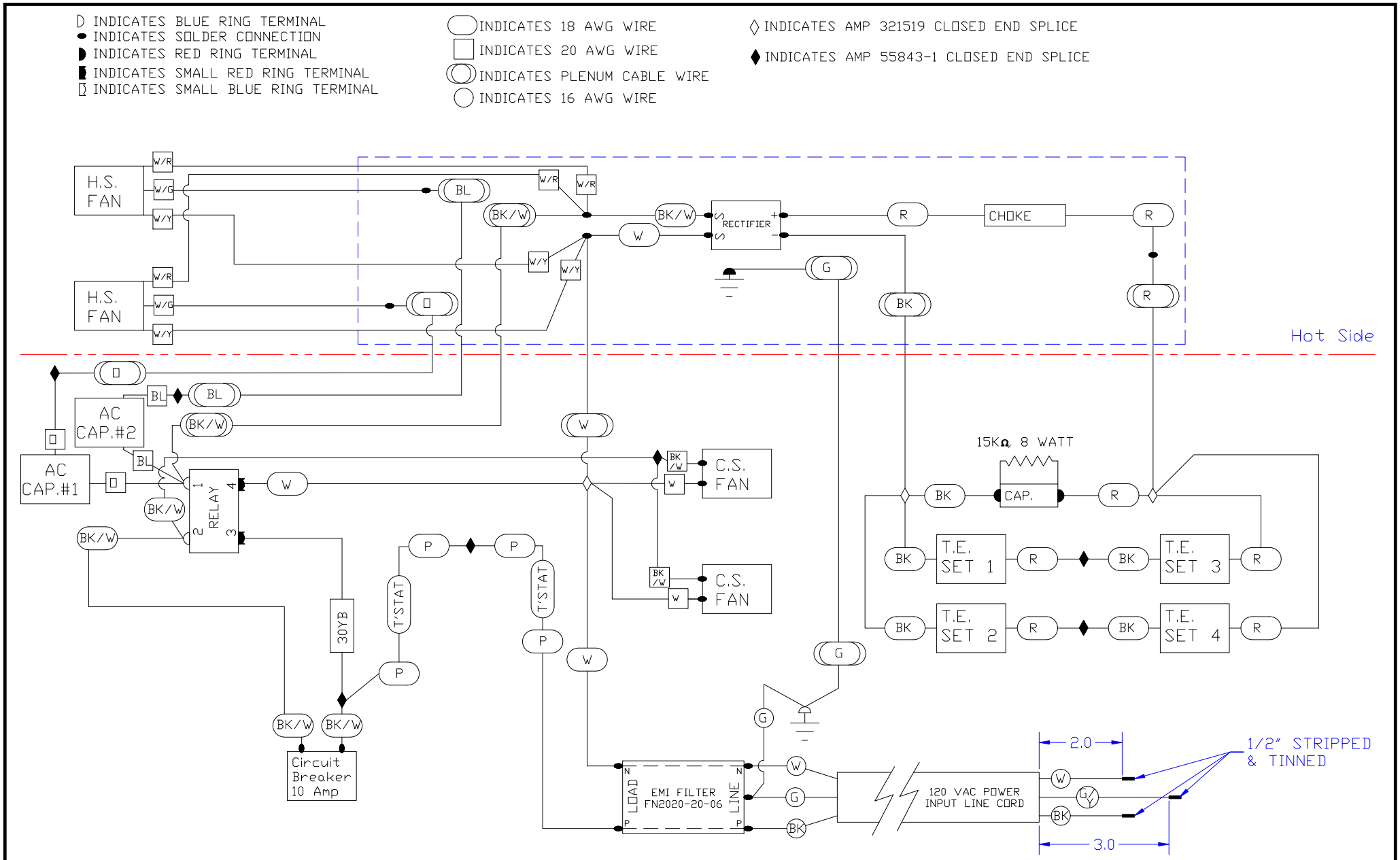

REV	DESCRIPTION	Date	APPROVED

INFORMATION DISCLOSED HEREIN IS THE CONFIDENTIAL PROPERTY OF TECA CORP. RECIPIENT SHALL NOT USE THE INFORMATION IN ANY UNAUTHORIZED MANNER.

UNLESS OTHERWISE SPECIFIED DIMENSIONS ARE IN INCHES
TOLERANCES ARE:
DECIMALS .XX +/- .XXX+/-
ANGLE +/-
FRACTION +/-

FINISH:

MATERIAL:

THERMOELECTRIC COOLING AMERICA CORP.

AHP-1800X WITH TC-1F
WIRING DIAGRAM

DRAWN BY: AA
DATE: 9/19/12
D8556

DRAWING # 1800-A-E116

SCALE

MASTER: 1800-A-E115

REV LEVEL

SHEET

Mounting, Monture, Montage, Montaggio

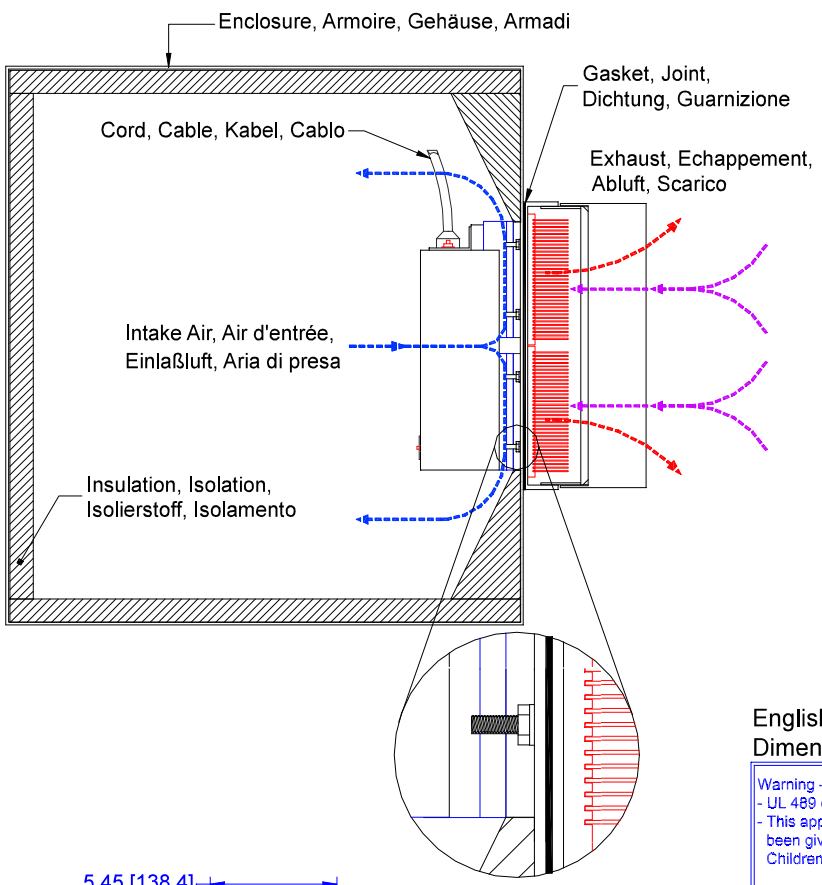

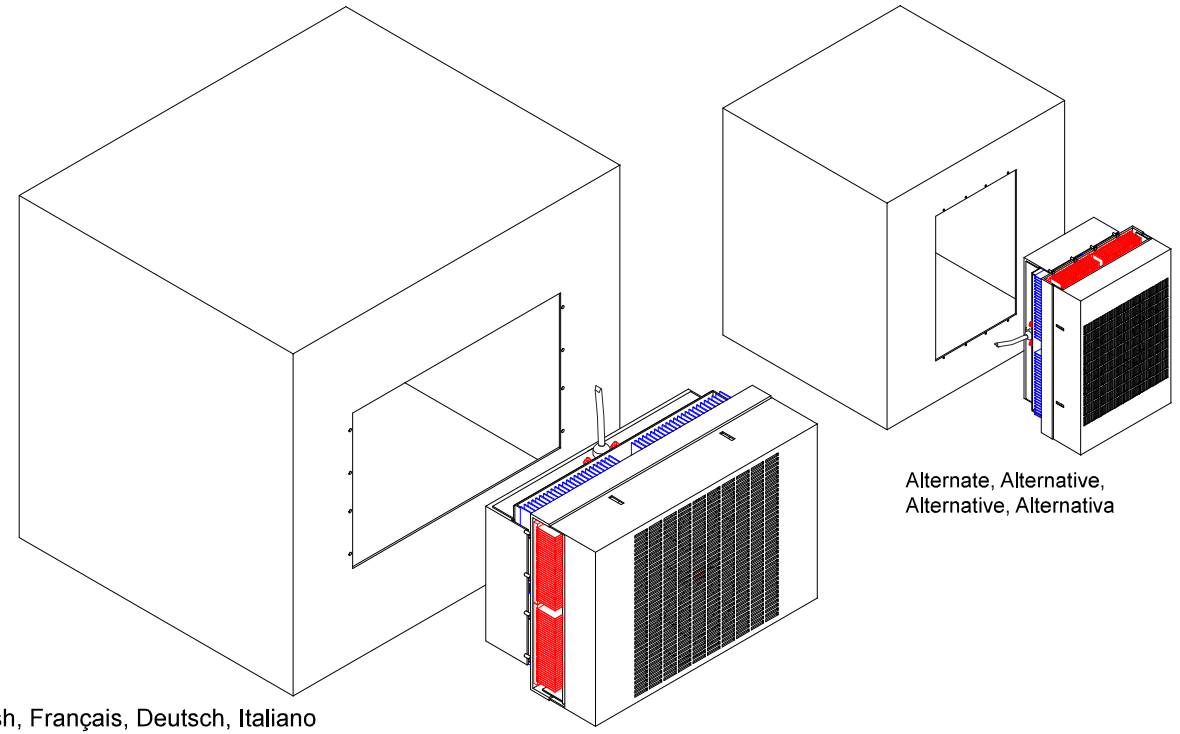

English, Français, Deutsch, Italiano

Dimensions: Inches [Millimeters]

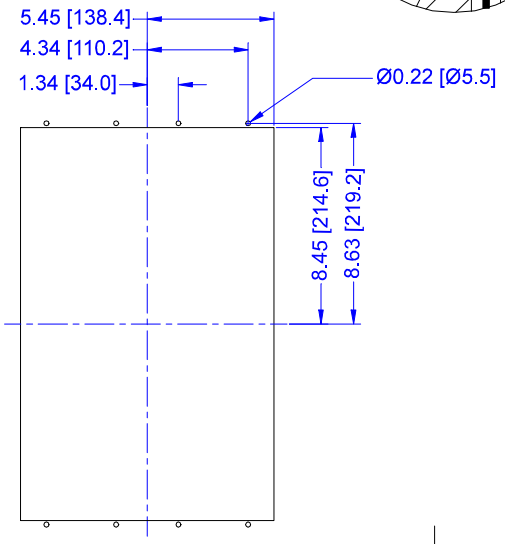

Warning - If the supply cord is damaged, it must be replaced by the manufacturer, its service agent or similarly qualified persons in order to avoid a hazard.
- UL 489 defines branch circuit protection of no more than 4X the rating of the supplemental protector to be used upstream. We suggest a slow reacting, 10-15 Amps circuit breaker.
- This appliance is not intended for use by persons (including children) with reduced physical, sensory or mental capabilities, or lack of experience and knowledge, unless they have been given supervision or instruction concerning use of the appliance by a person responsible for their safety.
  Children should be supervised to ensure that they do not play with the appliance.

Avertissement - Si le cordon d'alimentation est endommagé, il doit être remplacé par le fabricant, son agent de service ou de personne de qualification similaire afin d'éviter un danger.
- UL 489 définit la protection du circuit de pas plus de 4X la cote du protecteur supplémentaire pour être utilisé en amont. Nous suggérons une lente réaction, 10-15 disjoncteurs Amps.
- Cet appareil n'est pas destiné à être utilisé par des personnes (enfants compris) dont les capacités physiques, sensorielles ou mentales, ou le manque d'expérience et de connaissances, à moins qu'ils aient été donnés de surveillance ou d'instructions concernant l'utilisation de l'appareil par une personne responsable de leur sécurité.
  Les enfants doivent être surveillés afin de s'assurer qu'ils ne jouent pas avec l'appareil.

Achtung - Wenn das Netzkabel beschädigt ist, muss es durch den Hersteller, seinen Kundendienst oder eine ähnlich qualifizierte Person, um eine Gefahr zu vermeiden ersetzt werden.
- UL 489 definiert den Schutz der Stromzweige nicht mehr als 4X das Rating der Beschützer weiter flussaufwärts genutzt werden. Wir empfehlen eine langsame Reaktion, 10-15 Ampere-Sicherung.
- Dieses Gerät ist nicht für die Verwendung durch Personen (einschließlich Kinder) mit eingeschränkten physischen, sensorischen oder geistigen Fähigkeiten oder Mangel an Erfahrung und Wissen, bestimmt, sofern sie eine angemessene Aufsicht oder ausführliche Anleitung zur Benutzung des Geräts durch eine verantwortliche Person für ihre Sicherheit.
  Kinder sollten beaufsichtigt werden, um sicherzustellen, dass sie nicht mit dem Gerät spielen.

Attenzione - Se il cavo di alimentazione è danneggiato, esso deve essere sostituito dal produttore, dal suo agente di servizio o da un professionista al fine di evitare rischi.
- UL 489 definisce il circuito di protezione filiale di non più di 4X il rating del protettore supplementare da utilizzare a monte. Vi suggeriamo una lenta reazione, 10-15 interruttore Amp.
- Questo apparecchio non è destinato all'uso da parte di persone (bambini compresi) con ridotte capacità fisiche, sensoriali o mentali, o mancanza di esperienza e conoscenza, a meno che non siano sorvegliati o istruzioni per l'uso dell'apparecchio da una persona responsabile della loro sicurezza.
  I bambini devono essere supervisionati per assicurarsi che non giochino con l'apparecchio.

REV	DESCRIPTION	Date	APPROVED
A	Added UL489 branch circuit protection note and added unqualified operator and supervision note.	01/24/2012	AA

INFORMATION DISCLOSED HEREIN IS THE CONFIDENTIAL PROPERTY OF TECA CORP. RECIPIENT SHALL NOT USE THE INFORMATION IN ANY UNAUTHORIZED MANNER.

UNLESS OTHERWISE SPECIFIED DIMENSIONS ARE IN INCHES

TOLERANCES ARE:

DECIMALS .XX +/- .XXX+/-

ANGLE +/-

FRACTION +/-

FINISH:

MATERIAL:

THERMOELECTRIC COOLING AMERICA CORP.

AHP-1800 SERIES
TYPICAL FIELD MOUNTING

DRAWN BY: AA

DATE: 06/05/03

D6037

DRAWING # 1800-A-F49

REV LEVEL A

SCALE

MASTER: MASTER

SHEET

TC-1C AND TC-1H POWER TEMPERATURE SWITCHES

Models TC-1C and TC-1H power temperature controllers, with their small tolerance and reset differential, are the simplest and most cost effective way to control a cooling or heating device (VAC or VDC) without a need for a relay. For circuits that have higher current draw simply use them in conjunction with a solid state relay.

Part Numbers:

Mode	Part Number	Note
Cool	TC-1C-**XX**	switch closes on temperature rise
Heat	TC-1H-**XX**	switch closes on temperature drop

XX: Specify temperatures 20 °C, 25 °C, 30 °C, 35 °C for cool mode and 10°C, 15 °C for heat mode

Example: TC-1C-20 and TC-1H-10

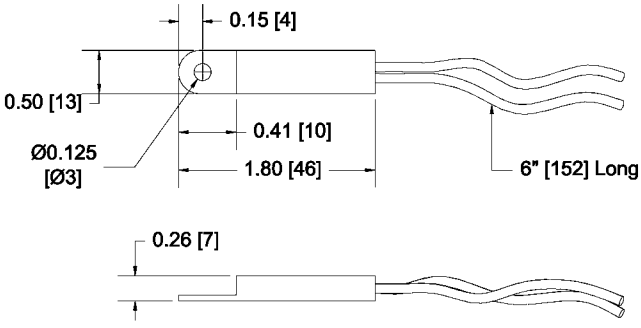

Dimensions: Inches [Millimeters]

TC-1 SPECIFICATION

VOLTAGE	CURRENT amps	SET POINT TOLERANCE °C	RESET DIFFERENTIAL °C
125 VAC	2	+/- 3	3 - 6
250 VAC	1.3	+/- 3	3 - 6
12 VDC	2	+/- 3	3 - 6
24 VDC	1.3	+/- 3	3 - 6

TC-6F COOL ONLY

Model TC-6F (Cool Only) thermostat is designed using two temperature power switches in conjunction with a solid state relay. A three position switch is provided to adjust temperature settings.

TC-6F SPECIFICATION

MODEL NUMBER	PART NUMBER	NOTES	TEMP @ T1 °C	TEMP @ T2 °C	T1-T2 (MAX) °C	RESET (TYP) °C	RESET °C	TEMP @ T3	OPERATING VOLTAGE	SWITCHING VOLTAGE	SWITCHING CURRENT
TC-6F	6F-00A-00-000	No Relay	35 +/- 5	25 +/- 5	10 +/- 3	6.5	3	Continuous On	NA	NA	NA
TC-6F-AC	6F-03T-00-000	VAC Version	35 +/- 5	25 +/- 5	10 +/- 3	6.5	3	Continuous On	85-250 VAC	24-280 VAC	10
TC-6F-DC	6F-43D-00-000	12/24 VDC	35 +/- 5	25 +/- 5	10 +/- 3	6.5	3	Continuous On	3.5-32 VDC	0-100 VDC	.02-20 ADC
TC-6F-DC	6F-33D-00-000	48 VDC	35 +/- 5	25 +/- 5	10 +/- 3	6.5	3	Continuous On	3.5-32 VDC	0-100 VDC	.02-20 ADC

TC-3F HEAT AND COOL

Model TC-3F (Heat/Cool) thermostat incorporates the same technology as the TC-6F. It contains a single setting each for both heating and cooling as referenced below:

TC-3F SPECIFICATION

MODEL NUMBER	PART NUMBER	NOTES	COOL TEMP. °C	HEAT TEMP. °C	RESET (MAX) °C	RESET (TYP) °C	OPERATING VOLTAGE	SWITCHING VOLTAGE	SWITCHING CURRENT
TC-3F-AC	3F-04R-00-000	VAC Version	35 +/- 5	15 +/- 5	6.5	3	85-250 VAC	24-280 VAC	10 AMPS
TC-3F-DC	3F-44G-00-000	12/24 VDC	35 +/- 5	15 +/- 5	6.5	3	3.5-32 VDC	0-100 VDC	.02 - 20 ADC
TC-3F-DC*	3F-44P-00-000	12/24 VDC	35 +/- 5	15 +/- 5	6.5	3	3.5-32 VDC	0-100 VDC	.02 - 20 ADC

* H-Bridge relays included

TC-7F HEAT AND COOL

Model TC-7F (Heat/Cool) thermostat incorporates the same technology as the TC-6F. It contains a single setting each for both heating and cooling and a heat exchanger mode:

TC-7F SPECIFICATION

MODEL NUMBER	PART NUMBER	NOTES	HX TEMP. °C	COOL TEMP. °C	HEAT TEMP. °C	RESET (MAX) °C	RESET (TYP) °C	OPERATING VOLTAGE	SWITCHING VOLTAGE	SWITCHING CURRENT
TC-7F-DC	7F-24G-00-000	24 VDC	20 +/- 3	35 +/- 3	10 +/- 3	6.5	3	24 VDC	24 VDC	.02 - 20 ADC

* H-Bridge relays included

LIMITED WARRANTY

In the event a defect in material or workmanship is discovered in any of TECA's products within one year after the date they are delivered to Buyer, and if: (a) TECA is notified of the defect in writing by certified mail within 14 days of the date of discovery; (b) TECA may then either, at its sole discretion, inspect the product at Buyer's location, or require that the product be made available at Buyer's expense at TECA's premises for TECA's inspection within 14 days of the date of notification; and (c) the products are defective and the defects result from faulty materials and/or workmanship and not in any way from accident, misuse, misapplication, mishandling, modification, or alteration by the Buyer or the shipper, then TECA shall, at its sole option, repair or exchange defective products free of charge to Buyer, or credit to buyer the price of the defective products. ALL OTHER WARRANTIES, EXPRESS OR IMPLIED, ARE EXCLUDED, INCLUDING BUT NOT LIMITED TO THE IMPLIED WARRANTIES OF MERCHANTABILITY AND FITNESS FOR A PARTICULAR PURPOSE. IN NO EVENT SHALL TECA BE LIABLE FOR ANY CLAIM BASED UPON BREACH OF EXPRESS OR IMPLIED WARRANTY OR ANY OTHER DAMAGES WHETHER SPECIAL, INDIRECT, INCIDENTAL, CONSEQUENTIAL, LOST PROFITS, BUSINESS INTERRUPTION, OR LOSS OF BUSINESS OR CUSTOMER RELATIONSHIPS.

RETURNED GOODS, RESTOCKING CHARGES

In order to return merchandise for any reason (repair, replacement, or credit) a return authorization number must be issued by TECA. New merchandise may not be returned for credit beyond 60 days from shipment. Charges for incidental or other damages may also be made. All returned goods must be sent freight prepaid. A restocking charge of 15% will apply. On special equipment and custom modified equipment orders, additional incremental cancellation charges may be made.